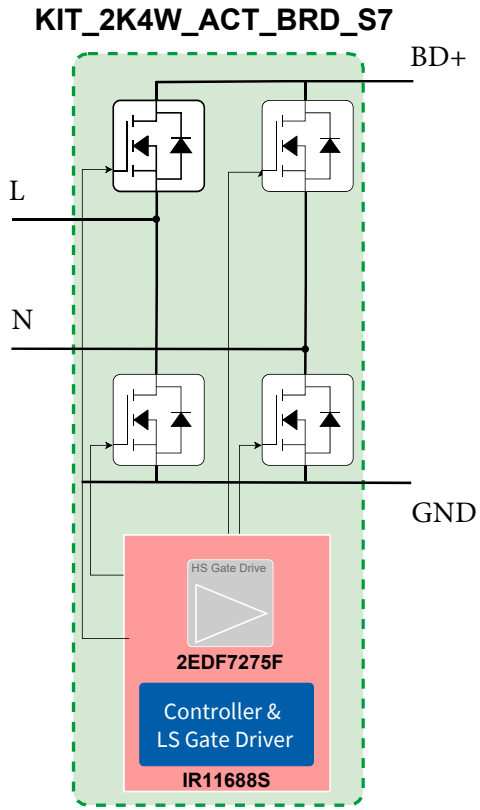
KIT_2K4W_ACT_BRD_S7
BD+
L
N
GND
HS Gate Drive
2EDF7275F
Controller &
LS Gate Driver
IR11688S